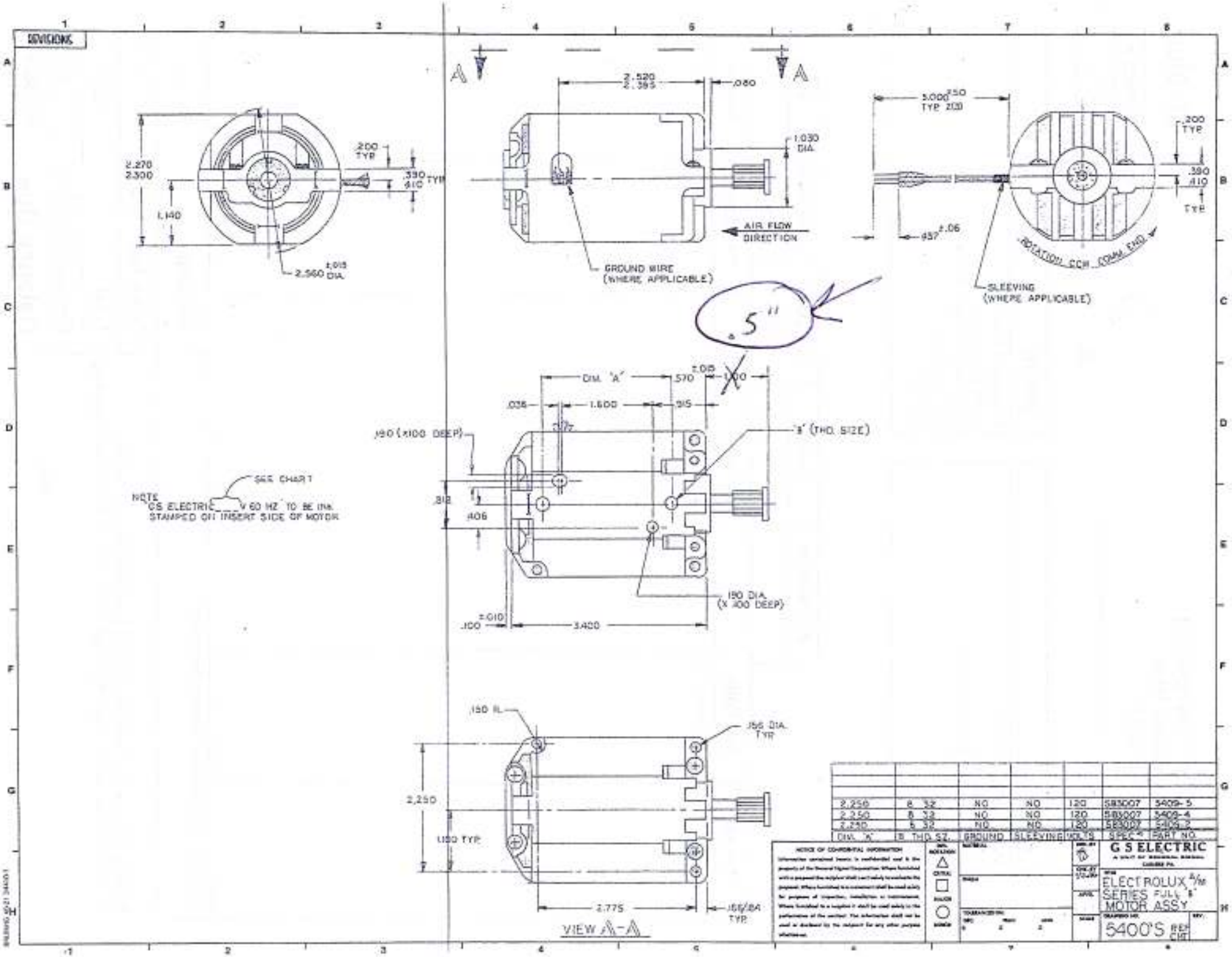

DIM. 'A'	B THD. SZ.	GROUND	SLEEVING	VOLTS	SPEC #	PART NO.
2.250	8 32	NO	NO	120	S83007	5409-5
2.250	8 32	NO	NO	120	S83007	5409-4
2.250	8 32	NO	NO	120	S83007	5409-2